Dimension:
Unit=mm

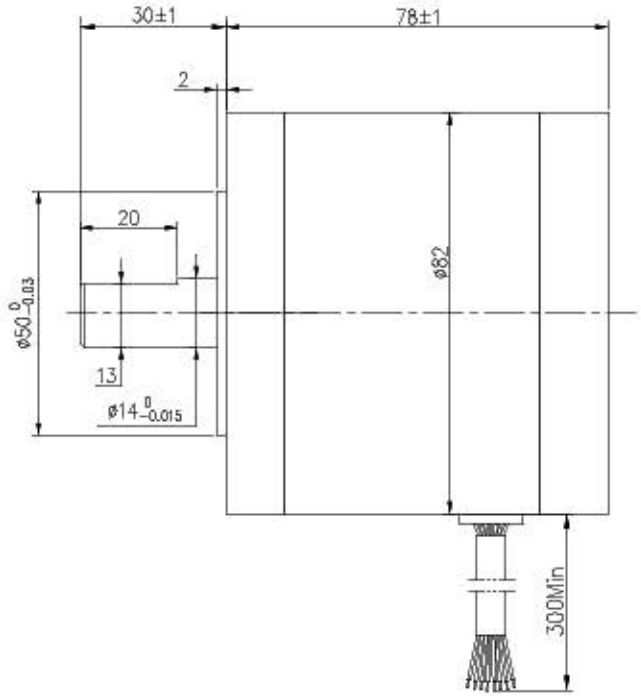

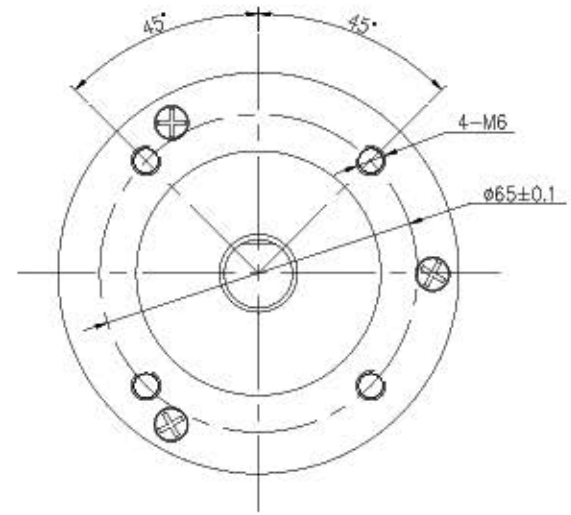

Connection diagram:

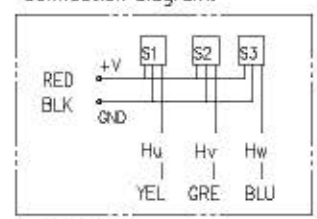

Hall sensor cable
Note: hall sensor power supply voltage +5 to +20VDC

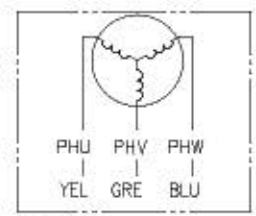

Wiring cable

ROTATION: CCW SEE FROM LEAD END

MANUFACTUER MODEL	JK80BLS01
NUMBER OF POLES	4
PHASE TO PHASE RESISTANCE	1.2 OHMS
NOMINAL VOLTAGE	48 VDC
NO LOAD SPEED	3600±10% RPM
NO LOAD CURRENT	0.8 Amps Max.
RATED TORQUE	0.35 N-m
RATED SPEED	3000±10% RPM
OUTPUT POWER	110 W
BACK EMF CONSTANT	13.5 V/kRPM
TORQUE CONSTANT	0.13 N-m/A
INSULATION CLASS	B

ELECTRICAL CONNECTION TABLE			
+5V	RED	红	UL1007 26 AWG
HALL U	YEL	黄	
HALL V	GRE	绿	
HALL W	BLU	蓝	
GND	BLK	黑	
PHASE U	YEL	黄	UL1015 18 AWG
PHASE V	GRE	绿	
PHASE W	BLU	蓝	

REV.	QTY.	No.	SIG.	DATE
DESIGN				
CHECK				
PROC.		APPR.		

Title:
Specification

CLS.MAK	WEIGHT	SCALE

PAGE: 1/1

常州倍士福机电有限公司

BF80BLS01

www.besfoc.cn