Dimension:
Unit=mm

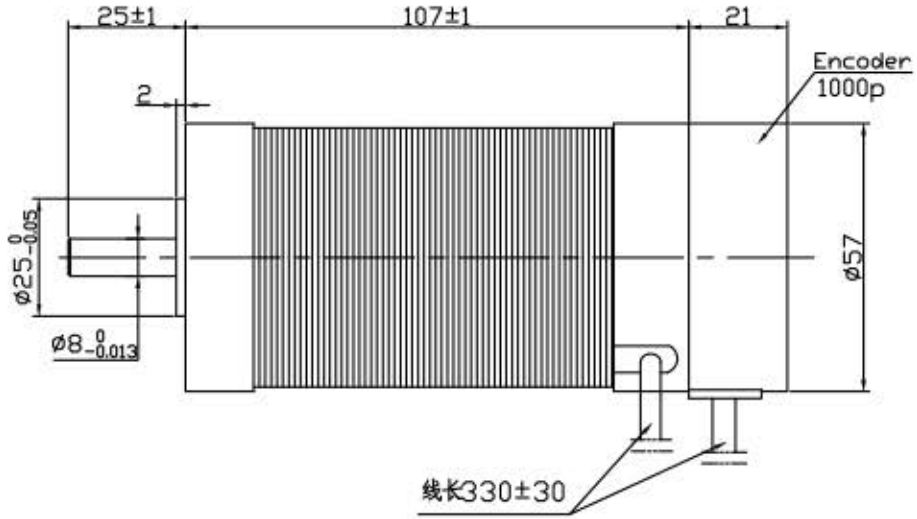

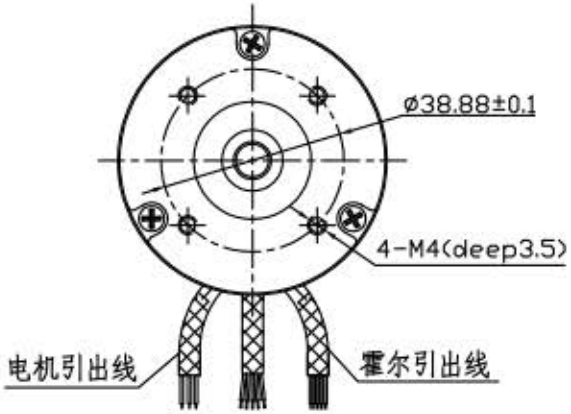

Connection diagram:

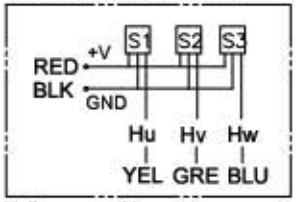

Hall sensor cable
Note: hall sensor power supply voltage +5 to +20VDC

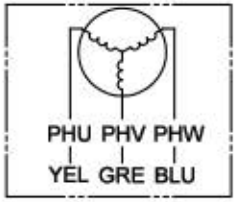

Wiring cable

Encoder Wiring Diagram:

EA+	Encoder A phase output+	GREEN 绿
EB+	Encoder B phase output+	BLUE 蓝
EZ+	Encoder Z phase output+	YELLOW 黄
Vcc	Encoder Voltage(+5V)	RED 红
EGND	Encoder Grand(0V)	BLACK 黑

ROTATION: CCW VIEWED FROM OUTPUT SAHFT

MANUFACTUER MODEL	JK57BLS04-X022ED
NUMBER OF POLES	4
PHASE TO PHASE RESISTANCE	0.42 OHMS
NOMINAL VOLTAGE	36 VDC
NO LOAD SPEED	4800±10% RPM
NO LOAD CURRENT	0.9 Amps Max.
RATED TORQUE	0.48 N-m
RATED SPEED	4000±10% RPM
OUTPUT POWER	200 W
BACK EMF CONSTANT	7.5 V/kRPM
TORQUE CONSTANT	0.072 N-m/A
INSULATION CLASS	B

ELECTRICAL CONNECTION TABLE			
+5V	RED	红	2517-26# 五芯屏蔽线
HALL U	YEL	黄	
HALL V	GRE	绿	
HALL W	BLU	蓝	
GND	BLK	黑	
PHASE U	YEL	黄	3*0.75 三芯护套线
PHASE V	GRE	绿	
PHASE W	BLU	蓝	

REV.					Title: Specification		常州倍士福机电有限公司
DESIGN					CLS.MAK	WEIGHT	SCALE	BF57BLS04-X022ED
CHECK							www.besfoc.cn
PROC.					PAGE: 1/1		